"APPROVED FOR RELEASE: 03/14/2001 CIA-RDP86-00513R001551010019-8

ance of cracks, which could be visually detected. The test results are tabulated and show that the scale resistance of the blades is affected by a number of structural and technical factors, in particular, by the surface condition. Sand-blown blades withstand about 20 to 40 more cycles than blades that were manually ground on a coarse emery stone. However, the sand-blown blades are 4 - 6 times less resistant (comparing the number of cycles until the appearance of cracks) than blades manual-ground with a file and fine emery paper. Blades made of a deformable alloy are by one order more scale-resistant than cast blades. It was established that the structural factors, determining the rigidity and temperature differences, exert a greater effect than defects of the scab type, since in all cases the breakdown occurred not in the scabs but was located in blade sections, determined by its design. The exceptional effect of the surface treatment upon scale resistance was confirmed by tests made with flat specimens whose surfaces were machined in different ways. There are 4 figures and 2 tables.

APPROVED FOR RELEASE: 03/14/2001 CIA-RDP86-00513R001551010019-8"

"APPROVED FOR RELEASE: 03/14/2001 CIA-RDP86-00513R001551010019-8

S/853/62/000/000/008/008
A006/A101

AUTHORS: Zhukov, S. L., Skladnov, I. K., Lapitskiy, Yu. A., Novikov, M. S.

TITLE: Investigating the scale resistance of heat-resistant alloy sheets

SOURCE: Termostoykost'zharoprochnykh splavov, sbornik statey, Ed. by N. M. Sklyarov Moscow, Oborongiz, 1962, 165 - 169

TEXT: The suitability of sheet materials for the manufacture of combustion chambers was tested on a machine designed by the authors (Author's Certificate no. 89849). The machine makes it possible to check and inspect the sheet material as if under operational conditions. The specimen is heated by passing electric current and cooled by an air jet. The thermal cycles are automatically controlled and their number is registered by a special electric counter. The whole heating-cooling cycle lasts from 30 sec to 2 minutes and more, and depends on the given conditions. One- and two- beveled specimens were tested at temperatures ranging from 200 to 900°C. The specimens were made of alloys X20 H80 T 3 (Kh20N80T3) X20 H80 T (Kh20N80T) X 18 H 12 M 2 (Kh18N12M2) X 18 H 11 Б (Kh18N11B), and chrome steels with 27% Cr and with 5% Ni. The number of thermal cycles until

Card 1/2

APPROVED FOR RELEASE: 03/14/2001 CIA-RDP86-00513R001551010019-8"

"APPROVED FOR RELEASE: 03/14/2001 CIA-RDP86-00513R001551010019-8

S/853/62/000/000/008/008
A006/A101

Investigating the scale resistance of...

the breakdown of specimens was almost twice as low for one-bevel as for two-bevel specimens; it decreased with higher quenching temperatures. At close quenching temperatures, alloy Kh20N80T was found to be more resistant to the effect of thermal cycles than the Kh20N80T3 alloy. The specimens broke down along the grain boundaries without noticeable plastic deformation. Higher quenching temperatures increasing from 1,050 to 1,200°C caused the growth of solid solution grains in alloy Kh20N80T and increased ductility at room temperature; ductility was reduced at elevated temperatures. The number of thermal cycles until the appearance of cracks was sharply reduced at higher quenching temperatures. There are 3 tables and 1 figure.

Card 2/2

APPROVED FOR RELEASE: 03/14/2001 CIA-RDP86-00513R001551010019-8"

"APPROVED FOR RELEASE: 03/14/2001 CIA-RDP86-00513R001551010019-8

L 14280-66 EWT(m)/EWP(w)/EWA(d)/T/EWP(t) IJP(c) JD/HW/GS

ACC NR: AT6008666 (N) SOURCE CODE: UR/0000/65/000/000/0228/0235

AUTHORS: Akimov, L. M. (Kiev); Kononchuk, N. I. (Kiev); Skladnov, I. K. (Kiev); Zverev, N. I. (Kiev); Pliskin, S. M. (Kiev); Krivenko, M. P. (Kiev); Smirnov, Yu. N. (Kiev); Lazareva, N. M. (Kiev)

ORG: none

TITLE: Investigation of the effects of several factors on the fatigue characteristics of heat resistant alloys used for turbine blade manufacture

SOURCE: Vsesoyuznoye soveshchaniye po voprosam staticheskoy i dinamicheskoy prochnosti materialov i konstruktsionnykh elementov pri vysokikh i nizkikh temperaturakh, 3d. Termoprochnost' materialov i konstruktsionnykh elementov (Thermal strength of materials and construction elements); materialy soveshchaniya. Kiev, Naukova dumka, 1965, 228-235

TOPIC TAGS: heat resistant alloy, metal property, metal fatigue/ EI437B alloy, EI617 alloy, EI867 alloy

ABSTRACT: The effects of several factors on the fatigue characteristics of heat resistant alloys EI437B, EI617 and EI867 were investigated and compared with

Card 1/3

APPROVED FOR RELEASE: 03/14/2001 CIA-RDP86-00513R001551010019-8"

"APPROVED FOR RELEASE: 03/14/2001 CIA-RDP86-00513R001551010019-8

L 14280-66

ACC NR: AT6008666

results obtained with a normal cylindrical fatigue specimen. The specimen shown in Fig. 1 was used to obtain fatigue curves ($< 2 \cdot 10^7$ cycles) showing the effects

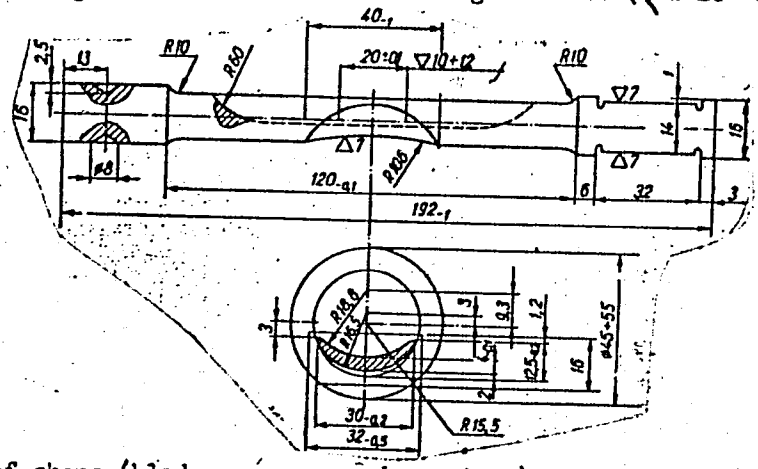

Fig. 1. Specimen geometry.

of shape (blade versus round specimen), environment (air and combustion products), cyclic heat loading, surface plating (calorizing), and temperature (373, 600, 873,

Card 2/3

APPROVED FOR RELEASE: 03/14/2001 CIA-RDP86-00513R001551010019-8"

"APPROVED FOR RELEASE: 03/14/2001 CIA-RDP86-00513R001551010019-8

L 14289-66

ACC NR: AT6008666

1070K) on the fatigue properties. It was found that the above factors had the following average effects on the fatigue strength: shape--20-30% lower than round specimen; combustion products--about 25% lower than in air; cyclic heat loads--EI437B (973-473-973K)--30% lower, EI617 (1073-473-1073K)--10% lower, EI867 (1173-473-1173K)--15% lower, calorizing--15% higher; decreased strength with increasing temperature. Orig. art. has: 7 figures.

SUB CODE: 11, 13, 21/ SUBM DATE: 19Aug65

Card 3/3 90

APPROVED FOR RELEASE: 03/14/2001 CIA-RDP86-00513R001551010019-8"

"APPROVED FOR RELEASE: 03/14/2001 CIA-RDP86-00513R001551010019-8

SKLALBAN, D.Kh.

Notes on the pharmaceutical industry in India. Med.prom. 10 no.4: 40-42 O-D '56. (MLRA 10:2)
(INDIA--DRUG INDUSTRY)

APPROVED FOR RELEASE: 03/14/2001 CIA-RDP86-00513R001551010019-8"

"APPROVED FOR RELEASE: 03/14/2001 CIA-RDP86-00513R001551010019-8

SHVEYTSER, V. [Schweizer, B.]; SKLAR, A.

Statistical metric spaces arising from sets of random variables in Euclidean n-space. Teor. veroiat. i ee prim. 7 no.4:456-465 '62. (MIRA 15:11)

1. The University of Arizona, Tucson and Illinois Institute of Technology, Chicago.
(Topology) (Mathematical statistics)

APPROVED FOR RELEASE: 03/14/2001 CIA-RDP86-00513R001551010019-8"

"APPROVED FOR RELEASE: 03/14/2001 CIA-RDP86-00513R001551010019-8

86404

S/020/60/134/004/030/036XX
C111/C333

16.5400

AUTHOR: Sklarenko, Ye.G.

TITLE: Representation of Compacts Having an Infinite Number of Dimensions as an Inverse Limit of Polyhedra

PERIODICAL: Doklady Akademii nauk SSSR, 1960, Vol. 134, No. 4, pp. 773 - 775

TEXT: Compacts which are the sum of a denumerable family of closed finite-dimensional subsets, are denoted as weakly denumerable-dimensional.
Theorem 1: In order that a compact X be weakly denumerable-dimensional, it is necessary and sufficient that it is representable as inverse limit of a polyhedral sequence $\{P_i, f_i^j\}$, so that the mappings f_i^j satisfy the Freudenthal conditions (Ref. 1) and that the dimensionalities of the carriers $T(\xi_i)$ are totally bounded for every fiber $\xi = \{\xi_i\}$, $\xi_i \in P_i$.
The proof follows essentially the scheme of (Ref. 1).
Theorem 2 : If a weakly denumerable-dimensional compact X is represented as an inverse limit of a polyhedral sequence $\{Q_k, h_k^l\}$ which satisfies the Freudenthal conditions, then by passage to a subsequence, admissible

Card 1/2

APPROVED FOR RELEASE: 03/14/2001 CIA-RDP86-00513R001551010019-8"

"APPROVED FOR RELEASE: 03/14/2001 CIA-RDP86-00513R001551010019-8

86 404

S/020/60/134/004/030/036XX
C111/C333

Representation of Compacts Having an Infinite Number of Dimensions as an Inverse Limit of Polyhedra

deformation of the mappings h_k^1 and subdivision of the complexes Q_k one can pass over from the initial sequence to a sequence, the limit of which is also X, while the fibers satisfy the conditions of theorem 1.

The author thanks Yu.M. Smirnov for advices.

There are 5 references : 3 Soviet, 1 Polish and 1 Dutch.

[Abstracter's note : (Ref. 1) is a paper of Freudenthal in Compositio Math., 1937, 4] .

ASSOCIATION: Moskovskiy gosudarstvennyy universitet imeni M.V.Lomonosova (Moscow State University imeni M.V. Lomonosov)

PRESENTED: May 17, 1960, by P.S. Aleksandrov, Academician

SUBMITTED: May 6, 1960

Card 2/2

APPROVED FOR RELEASE: 03/14/2001 CIA-RDP86-00513R001551010019-8"

"APPROVED FOR RELEASE: 03/14/2001 CIA-RDP86-00513R001551010019-8

SKLARO, A.

Dairying

Extend socialist competition in fulfilling the 1953 plan ahead of time. Moloch. prom. 14, no. 3, 1953.

9. Monthly List of Russian Accessions, Library of Congress, May 1953. Unclassified.

APPROVED FOR RELEASE: 03/14/2001 CIA-RDP86-00513R001551010019-8"

"APPROVED FOR RELEASE: 03/14/2001 CIA-RDP86-00513R001551010019-8

SKLARSKI, L., GORECKI, H.

"Transients in a Ward-Leonard electric hoist." p. 227. (ARCHIWUM ELEKTROTECHNIKI Vol. 2, No. 3/4, 1953. Warszawa, Poland.)

SO: Monthly List of East European Accessions. (EEAL). LC. Vol. 4, No. 4. April 1955. Uncl.

APPROVED FOR RELEASE: 03/14/2001 CIA-RDP86-00513R001551010019-8"

"APPROVED FOR RELEASE: 03/14/2001 CIA-RDP86-00513R001551010019-8

SKLAVO, M., mayor tekhnicheskoy sluzhby.

Stand for leveling the covers of TM-46 practice mines. Voen.-inzh. 101 no.4:33 Ap '57. (MLRA 10:6)

(Mines, Military)

APPROVED FOR RELEASE: 03/14/2001 CIA-RDP86-00513R001551010019-8"

"APPROVED FOR RELEASE: 03/14/2001 CIA-RDP86-00513R001551010019-8

SKLEDAR, S.

Determination of the total sulfur in coal by the Eschka method. M. Sorum and S. Skledar. *Acad. Sci. Arts. Sloven.* (Ljubljana), Class [redacted] Dissertationes 1, 45–51(1953)(English summary).—Coal from the Zabrze Mine, because of its high-S content, has made it necessary to devise a new and more reliable method for its determ. For this purpose the Eschka method has been adopted. This method is based upon the oxidation of the org. substance with hot HNO_3 in the presence of MgO. Because of the time-consuming nature of the process and the consumption of chemicals, this process is not suitable for routine analyses. However, it can be useful in cases where other methods give poor results. J. Rovtar Zeuch

APPROVED FOR RELEASE: 03/14/2001 CIA-RDP86-00513R001551010019-8"

"APPROVED FOR RELEASE: 03/14/2001 CIA-RDP86-00513R001551010019-8

YUGOSLAVIA/Chemical Technology - Chemical Products and Their Applications - Treatment of Solid Fuels. H.

Abs Jour : Ref Zhur - Khimiya, No 11, 1958, 37476

Author : Gasparini, A., Samec, M., Skledar, S.
Inst : -
Title : Ash Content Determination of Sulfur-Rich Coals and Cokes

Orig Pub : Razpr. Slov. Akad. znan in umetn. Razr. mat., Fiz. in tehn. vede, 1953, 5, No 4, 55-72

Abstract : A method for ash content determination of "Rasha" (Yugoslavia) coals containing up to 10% of S has been worked out. It has been established that ash content should be determined in an electric muffle furnace at 750°C. The weighted portion should be placed in a hollow dish and introduced into a cold muffle furnace, in order to avoid excessively rapid blowing up of the coal, and left exposed to air in the initial stage of heating. Heating time was 3 hours at 750°C.

Card 1/1

APPROVED FOR RELEASE: 03/14/2001 CIA-RDP86-00513R001551010019-8"

"APPROVED FOR RELEASE: 03/14/2001 CIA-RDP86-00513R001551010019-8

SKLEDAR, S.

V4848. EXTRACTION OF HUMIC ACIDS FROM SOME SLOVENIAN BROWN COALS.
Sklabar, S. (Nova Proizvod. (New Industr., Ljubljana), 1955, (5/6), 335-348).
An attempt was made, using alkali, to determine the effect of the solution of humates, and of preliminary digestion of the coal, on the extraction. The humic acids obtained were a mixture of various substances. The ethyl alcohol-soluble fraction was examined photometrically and lay within the limits of "acidum humicum Merck".

APPROVED FOR RELEASE: 03/14/2001 CIA-RDP86-00513R001551010019-8"

"APPROVED FOR RELEASE: 03/14/2001 CIA-RDP86-00513R001551010019-8

S/081/62/000/023/087/120
B144/B186

AUTHOR: Skledar, Štefan

TITLE: Use of lubricants and testing of their quality

PERIODICAL: Referativnyy zhurnal. Khimiya, no. 23, 1962, 597, abstract 23M225 (Zašt. mater., v. 9, no. 10, 1961, 509 - 512 [Serbo-Croat.])

TEXT: Lubricants are described which are applied to metal without diluent by flame spraying, e.g., synthetic resins or plastics in pulverized state. The structure of the film, the adhesion to the metal and other properties were studied in 6 samples of polyethylene and polyamide applied to a steel surface, and the results are given. [Abstracter's note: Complete translation.]

Card 1/1

APPROVED FOR RELEASE: 03/14/2001 CIA-RDP86-00513R001551010019-8"

"APPROVED FOR RELEASE: 03/14/2001 CIA-RDP86-00513R001551010019-8

SKLEDAR, Stefan, dr. inz.

Condensed phosphates in modern technical science. Nova proizv 13 no.4:286-295 S '62.

APPROVED FOR RELEASE: 03/14/2001 CIA-RDP86-00513R001551010019-8"

"APPROVED FOR RELEASE: 03/14/2001 CIA-RDP86-00513R001551010019-8

SKIEDAR, Stefan, dr. inz.

Phosphorous derivatives in the surface protection of materials. Nova proiz 13 no.5:343-355 N '62.

APPROVED FOR RELEASE: 03/14/2001 CIA-RDP86-00513R001551010019-8"

"APPROVED FOR RELEASE: 03/14/2001 CIA-RDP86-00513R001551010019-8

SKLEDAR, Stefan, dr. inz.

Chemical characterization of iron sulfide minerals of Yugoslavia. Nova proizv. 14 no.5/6:369-383 O '63

APPROVED FOR RELEASE: 03/14/2001 CIA-RDP86-00513R001551010019-8"

"APPROVED FOR RELEASE: 03/14/2001 CIA-RDP86-00513R001551010019-8

SKLENAR, A.

BA
B-III

Arrangements for throwing waste materials. Československé Závody Tešného Strojírenství N.P., and A. Sklenar (B.P. 675,023, 19.4.50. Czechoslov., 27.4.49).—A wheel consisting of a pair of end discs between which radial blades are enclosed is driven by an endless belt which bears against the rotating wheel in such a manner that it closes the space between the individual blades, thus forming a movable bottom for the chambers which are formed by two adjacent blades and the end discs of the wheel. O. Porran.

APPROVED FOR RELEASE: 03/14/2001 CIA-RDP86-00513R001551010019-8"

"APPROVED FOR RELEASE: 03/14/2001 CIA-RDP86-00513R001551010019-8

[illegible], [illegible]

Transportation in the machinery industry. p. 453. (TECHNICKA PRACA, Vol. 9, No. 7, July 1957, Bratislava, Czechoslovakia)

SO: Monthly List of East European Accessions (EEAL) LC, Vol. 6, No. 12, Dec 1957. Uncl.

APPROVED FOR RELEASE: 03/14/2001 CIA-RDP86-00513R001551010019-8"

"APPROVED FOR RELEASE: 03/14/2001 CIA-RDP86-00513R001551010019-8

ACCESSION NR: AP4017186 Z/0039/64/025/003/0122/0126

AUTHOR: Sklenar, Bohuslav (Engineer)

TITLE: The ratio between junction shot noise and thermal noise of the series resistance in a tunnel diode

SOURCE: Slaboproudy obzor, v. 25, no. 3, 1964, 122-126

TOPIC TAGS: junction shot noise, thermal noise, tunnel diode, dimensionless ratio, series resistance

ABSTRACT: A new parameter is suggested characterizing the relationship between shot and thermal noise in a tunnel diode. This parameter, called the dimensionless ratio, is defined as the ratio between the emf of a generator of shot noise and the emf of an equivalent generator of thermal noise in the series resistance. The argument is developed in a series of 33 mathematical equations. Areas are defined where the different sources of noise predominate, and an approximate relationship is established between the frequency of the noise f_n and the boundary frequency of the tunnel diode f_o. The

Card 1/3

APPROVED FOR RELEASE: 03/14/2001 CIA-RDP86-00513R001551010019-8"

"APPROVED FOR RELEASE: 03/14/2001 CIA-RDP86-00513R001551010019-8

ACCESSION NR: AP4017186

equivalent generator of the thermal noise of the series resistance in a tunnel diode cannot be neglected in the computation of noise characteristics if the amplifier works with the tunnel diode at frequencies higher than 1/10 of the boundary frequency. At lower frequencies, when $f \leqslant 0.05\ f_0$, the contribution of thermal noise can be neglected only if the dimensionless ratio established by the following formulas is sufficiently large:

$$h_0' = \sqrt{\frac{20 I_d r_d}{r_s}}, \quad h_0 = \sqrt{\frac{r_d}{r_s}},$$

where h_0 is the dimensionless ratio for low frequencies, I_d is the d-c current of the tunnel diode in its quiescent point, r_d is the negative resistance of the tunnel diode in its quiescent point, and r_s is the series resistance of the tunnel diode. Orig. art. has: 4 figures, 33 formulas, and 2 tables.

ASSOCIATION: Vyzkumny ustav pro sdelovaci techniku A. S. Popova, Prague (Institute for Manufacturing Technology)

Card 2/3

APPROVED FOR RELEASE: 03/14/2001 CIA-RDP86-00513R001551010019-8"

"APPROVED FOR RELEASE: 03/14/2001 CIA-RDP86-00513R001551010019-8

ACCESSION NR: AP4017186

SUBMITTED: 31Oct63 DATE ACQ: 23Mar64 ENCL: 00

SUB CODE: EC, GP NO REF SOV: 001 OTHER: 010

Card 3/3

APPROVED FOR RELEASE: 03/14/2001 CIA-RDP86-00513R001551010019-8"

"APPROVED FOR RELEASE: 03/14/2001 CIA-RDP86-00513R001551010019-8

L 26341-65 EWT(1)/EWG(k)/EEC(k)-2/T/EEC(b)-2/EWA(h) Pm-4/Pn-6/Peb/Pj-4
IJP(c)
ACCESSION NR: AP4046145 Z/0039/64/025/010/0585/0588

40
27
B

AUTHOR: Sklenar, B. (Engineer)

TITLE: Determination of the noise constant of a tunnel diode from its d-c volt-ampere characteristic

SOURCE: Slaboproudy obzor, v. 25, no. 10, 1964, 585-588

TOPIC TAGS: noise constant, tunnel diode, volt ampere characteristic, voltage axis, current axis, exponential curve, exponential characteristic, theoretical characteristic

ABSTRACT: The author shows that the theoretical exponential characteristic of a tunnel diode has the same noise constant at all of its points. This property was used to develop a measurement method for the rapid determination of the noise constant by recording the d-c volt-ampere response of the tunnel diode with an oscilloscope. The noise constant is determined by comparing the actual and calculated exponential characteristic. The raster of exponential characteristics for various noise constants (i.e., k_{n0} = 0.8 ... 1.8) can be outlined on the screen of the oscilloscope with which the d-c volt-ampere characteristic is recorded. The voltage axis of the recorded characteristic must be of the same scale as the horizontal axis of the recorded characteristic must be of the same scale as the horizontal

Card 1/ 2

APPROVED FOR RELEASE: 03/14/2001 CIA-RDP86-00513R001551010019-8"

"APPROVED FOR RELEASE: 03/14/2001 CIA-RDP86-00513R001551010019-8

L 26341-65

ACCESSION NR: AP4046145

scale of the calculated characteristic; this can be assured by proper calibration. By changing the gain of the vertical amplifier (change of scale of the current axis) successive common points with common tangents are found in all characteristics, and with this the corresponding noise constant k_{n0}. In using the described graph of the oscilloscopic method for finding k_{n0}, three cases may present themselves: 1) the d-c volt-ampere characteristic does not have a common point and is not tangent to the exponential curve; 2) there exists only one point with the common tangent common to the measured and theoretical exponential characteristic; 3) two common points with common tangents are found on the d-c volt-ampere characteristic by comparison with the exponential characteristic. Orig. art. has: 5 figures and 11 formulas.

ASSOCIATION: Vyzkumny ustav pro sdelovaci techniku A.S. Popova, Prague (Research Institute for Communications)

SUBMITTED: 03Feb64 ENCL: 00 SUB CODE: EC

NO REF SOV: 001 OTHER: 001

Card 2/2

APPROVED FOR RELEASE: 03/14/2001 CIA-RDP86-00513R001551010019-8"

"APPROVED FOR RELEASE: 03/14/2001 CIA-RDP86-00513R001551010019-8

ZELENAR, F.

From the history of our railroads; sixty years of the railroad Rakovnik-Mladotice. p. 249.

ZELEZNICAR. (Ministerstvo dopravy) Praha, Czechoslovakia. No. 9, Sept. 1959.

Monthly List of East European Accessions (EEAI) LC, Vol. 8, No. 11, November 1959.

Uncl.

APPROVED FOR RELEASE: 03/14/2001 CIA-RDP86-00513R001551010019-8"

"APPROVED FOR RELEASE: 03/14/2001 CIA-RDP86-00513R001551010019-8

ACC NR: AP7003754 SOURCE CODE: CZ/0030/67/000/001/0022/0027

AUTHOR: Sklenar, G.

ORG: A. S. Popov Research Institute for Communications Equipment (Vyzkumny ustav pro sdelovaci techniku)

TITLE: Laser pulse discharge tubes from Czechoslovak technical glass

SOURCE: Jemna mechanika a optika, no. 1, 1967, 22-27

TOPIC TAGS: laser equipment, discharge tube, glass tube, laser crystal, glass electrode, laser pulsation, xenon

ABSTRACT: Xenon discharge tubes are almost universally used to excite lasers, particularly pulse tubes, since mercury tubes take 2 to 5 min to attain full capacity. The xenon discharge is described in detail as to its spectrum, gas pressure, luminosity, flash time in milliseconds, heat released, and its plasma resistance, which decreases with tube dimensions. Luminosity is maintained with less energy input if tubes are made of hard technical glass in place of quartz. Thermal expansion coefficients of hard and soft glasses, quartz, and electrodes of molybdenum, tungsten, kovar, and tantalum are discussed. Glass tubes are usually 5—12 mm in diameter, 0.8 to 1.2 mm thick. Both tube and metal must be degassed and free of flaws and impurities in order to maintain a vacuum. Relative positions of discharge tube, laser crystal, air-cooled reflector are described, and the positioning of straight, double U-shaped, or spiral

Card 1/2 UDC: 621.327.621.378.33

APPROVED FOR RELEASE: 03/14/2001 CIA-RDP86-00513R001551010019-8"

"APPROVED FOR RELEASE: 03/14/2001 CIA-RDP86-00513R001551010019-8

ACC NR: AP7003754

tubes is discussed on the basis of sizes and shapes made at VUST. The best hard technical glass made in Czechoslovakia, SIMAX, was found most suitable for this purpose. Its thermal expansion coefficient is the lowest of the glass produced in Czechoslovakia, 32.10^{-7}, and its transformation temperature is 520C. Molybdenum sealing glass, MoKa, is the best produced in the country; its thermal expansion coefficient is 50.10^{-7} and its transformation temperature 550C. SIAL glass has a thermal expansion of 47.10^{-7} and was used between the SIMAX and MoKa. The process of making molybdenum electrodes is described and a formula is derived for maximum energy input. Tables compare the types and voltages of VUST discharge tubes with those produced in East Germany, Great Britain and the USA. Orig. art. has: 4 formulas, 4 tables, and 11 figures. [26]

SUB CODE: 20/ SUBM DATE: 04Mar66/ ORIG REF: 006/ OTH REF: 005/ SOV REF: 001
ATD PRESS: 5114

Card 2/2

APPROVED FOR RELEASE: 03/14/2001 CIA-RDP86-00513R001551010019-8"

"APPROVED FOR RELEASE: 03/14/2001 CIA-RDP86-00513R001551010019-8

SKLENAR, I.; NOVIC, J.

Welding metal valves. p. 393 (Slaboproudy Obzor. Praha. Vol. 15, no. 8, Aug. 1954)

SO: Monthly List of East European Accessions, (EEAL), LC, Vol. 4, No. 6, June 1955, Uncl.

APPROVED FOR RELEASE: 03/14/2001 CIA-RDP86-00513R001551010019-8"

"APPROVED FOR RELEASE: 03/14/2001 CIA-RDP86-00513R001551010019-8

SURNAME, Given Names

Country: Czechoslovakia

Academic Degrees:

Affiliation: [illegible] and Veterinary Dietetics Veterinary College (Katedra [illegible] a dietetiky veterinarni fakulty VSZ)Brno/Chief Dr Jaroslav KABRT/

Source: Prague, Sbornik CSAZV Veterinarni Medicina Vol 6(34), No 8, Aug 61; pp 657 664

Data: "Vitamin A Level in Deficient [illegible] Balanced Diets for Pigs in the Winter Season"

DVORAK, Ji[illegible] [illegible] veterinarian
SKLENAR, Jaroslav

GPO 981643

APPROVED FOR RELEASE: 03/14/2001 CIA-RDP86-00513R001551010019-8"

"APPROVED FOR RELEASE: 03/14/2001 CIA-RDP86-00513R001551010019-8

L 18791-66 EWP(k)/EWT(d)/EWP(h)/EWP(1)/EWP(v)

ACC NR: AP6010883 SOURCE CODE: CZ/0034/65/000/010/0708/0717

AUTHOR: Cerveny, Eduard (Engineer); Sklenar, Jaroslav

ORG: [Cerveny] VUHZ, Prague; [Sklenar] VZKG, Ostrava

53
B

TITLE: Designing the roll pass for the 1150 slabbing mill 14

SOURCE: Hutnicke listy, no. 10, 1965, 708-717

TOPIC TAGS: metal rolling, steel, automatic control, electronic computer, punched card

ABSTRACT: The procedure of the computations for designing the roll pass is explained, and examples are presented in the form of tables for the rolling of ingots of various weights (10, 16 and 24 tons) and steel grades, into slabs of various sizes, with due consideration for automatic control. All the values were adapted to using an electronic computer. Punched cards containing the results of the computations make it possible to compute the setting of the roll pass design of the entire rolling schedule (on about 520 punched cards) in several hours. Orig. art. has: 5 figures, 11 formulas, and 7 tables. [JPRS]

SUB CODE: 13, 09 / SUBM DATE: none / ORIG REF: 003 / OTH REF: 001
SOV REF: 001

Card 1/1 UDC: 621.944.3-412

APPROVED FOR RELEASE: 03/14/2001 CIA-RDP86-00513R001551010019-8"

"APPROVED FOR RELEASE: 03/14/2001 CIA-RDP86-00513R001551010019-8

[illegible], J.

Calculation of pipettes. p. 179.

Vol. 4, no. 5, May 1954
VEDNI KONTROLNI VI
Praha, Czechoslovakia

Source: East European Accession List. Library of Congress
Vol. 5, No. 8, August 1956

APPROVED FOR RELEASE: 03/14/2001 CIA-RDP86-00513R001551010019-8"

"APPROVED FOR RELEASE: 03/14/2001 CIA-RDP86-00513R001551010019-8

[illegible], J.

Calculation of [illegible]. p. 216.

Vol. [illegible], no. [illegible], July 1954
VODNI HOSPODARSTVI
Praha, Czechoslovakia

Source: East European Accession List. Library of Congress
Vol. 5, No. 1, August 1956

APPROVED FOR RELEASE: 03/14/2001 CIA-RDP86-00513R001551010019-8"

"APPROVED FOR RELEASE: 03/14/2001 CIA-RDP86-00513R001551010019-8

[illegible], [illegible].

[illegible], [illegible]. Contribution to the solution of circular pipeline [illegible] problem, [illegible] 31[illegible].

[illegible] 5, [illegible] 1, [illegible] 1951
[illegible] AUSTRIAN/V1
[illegible] CI
[illegible], General [illegible]

[illegible], [illegible], [illegible], [illegible] 1, [illegible]

APPROVED FOR RELEASE: 03/14/2001 CIA-RDP86-00513R001551010019-8"

"APPROVED FOR RELEASE: 03/14/2001 CIA-RDP86-00513R001551010019-8

SKLENAR, J.

CZECHOSLOVAKIA/Processes and Equipment for Chemical Industries - Processes and Apparatus for Chemical Technology K-1

Abs Jour : Referat Zhur - Khimiya, No9, 1957, 33216

Author : Sklenar, J.
Inst :
Title : Flow of Water Through Glass Pipe-Lines

Orig Pub : Voda, 1956, 35, No 7, 198-202

Abstract : It is noted that pressure losses in glass pipe-lines are due to generally recognized inherent characteristics. A nomograph is provided for the determination of localized resistances at junctions of the pipes.

Card 1/1

APPROVED FOR RELEASE: 03/14/2001 CIA-RDP86-00513R001551010019-8"

"APPROVED FOR RELEASE: 03/14/2001 CIA-RDP86-00513R001551010019-8

SKLENAR, JAROSLAV

7443* (Czech.) Design of Rolls and Passes for the Rolling Mill. Kalibrace a konstrukce válců blokovýcla trati. Jaroslav Sklenář. *Hutník*, v. 7, Jan. 1957, p. 16-22.

The proper design of passes and the sequence of operations, considering proper taper, spread, and other factors. Compares Czech and Soviet roll design and operation.

APPROVED FOR RELEASE: 03/14/2001 CIA-RDP86-00513R001551010019-8"

"APPROVED FOR RELEASE: 03/14/2001 CIA-RDP86-00513R001551010019-8

SKLENAR, J.

"Economical design of pipes in a gravity water-supply system." p. 217.

VODNI HOSPODARSTVI. (Ustredni sprava vodniko hospodarstvi). Praha, Czechoslovakia, No. 5, May 1959.

Monthly list of East European Accessions (EEAI), LC, Vol. 8, No. 8, August 1959.
Uncla.

APPROVED FOR RELEASE: 03/14/2001 CIA-RDP86-00513R001551010019-8"

"APPROVED FOR RELEASE: 03/14/2001 CIA-RDP86-00513R001551010019-8

L 21468-66 EWP(t)/EWP(k) JD/HW

ACC NR: AP6011977 SOURCE CODE: CZ/0057/65/000/007/0275/0281

AUTHOR: Cerveny, Eduard (Engineer); Sklenar, Jaroslav

ORG: [Cerveny] VUHZ, Prague; [Sklenar] VZKG, Ostrava

25
13

TITLE: Technology of slabbing rolling 16

SOURCE: Hutnik, no. 7, 1965, 275-281

TOPIC TAGS: metal rolling, metallurgic process

ABSTRACT: The rolling method according to the arrangement of the benches, kinds of ingots rolled, and the position of ingots introduced into the rolling train is described. Optimization of the operation from the points of view of throughput, yield, and the quality of the final product is discussed. The application of the results of the investigation in the design of the Iron Works of East Slovakia is evaluated. The advantages that will be gained in the production of wide plates are described. Orig. art. has: 7 figures and 4 tables. [JPRS]

SUB CODE: 13 / SUBM DATE: none

Card 1/1 dda

APPROVED FOR RELEASE: 03/14/2001 CIA-RDP86-00513R001551010019-8"

"APPROVED FOR RELEASE: 03/14/2001 CIA-RDP86-00513R001551010019-8

L 34428-66 EWP(k)/EWP(h)/EWP(v)/EWP(t)/EWP(1)/ETI IJP(c) BC/JD/HW

ACC NR: AP6026196 SOURCE CODE: CZ/0034/65/000/011/0776/0782

AUTHOR: Cerveny, Eduard--Chervenyy, E. (Engineer); Loserth, Petr--Losert, P. (Engineer); Sklenar, Jaroslav--Sklenarzh, I. 47 B

ORG: [Cerveny] Research Institute of Ferrous Metallurgy, Prague (Vyzkumny ustav hutnictvi zeleza); [Loserth, Sklenar] VZKG, Ostrava

TITLE: Analysis of the slabbing mill rolling cycle

SOURCE: Hutnicke listy, no. 11, 1965, 776-782

TOPIC TAGS: metal rolling, computer, automatic control, mathematic model

ABSTRACT: The article presents a method of regulation of revolutions on which rolling time and downtime may be computed. Adequate criteria and mathematical models are given for the determination of optimum times for automatic control by a computer. A graphic solution based on additional simplifying relationships is presented. Orig. art. has: 8 figures, 3 formulas and 1 table. [Based on authors' Eng. abstract] [JPRS: 33,732]

SUB CODE: 13 / SUBM DATE: none / ORIG REF: 002

Card 1/1 UDC: 621.944.3-412

APPROVED FOR RELEASE: 03/14/2001 CIA-RDP86-00513R001551010019-8"

"APPROVED FOR RELEASE: 03/14/2001 CIA-RDP86-00513R001551010019-8

ACC NR: AP6036346 SOURCE CODE: CZ/0057/66/000/011/0539/0543

AUTHOR: Sklenář, Jaroslav

ORG: Vitkovice Iron Works K. G., Ostrova (Vítkovické železárny K. G.)

TITLE: New slabing mill at the East Slovak Metallurgical Plant

SOURCE: Hutnik, no. 11, 1966, 539-543

TOPIC TAGS: metal rolling, blast furnace, slabing mill / 1150 slabing mill

ABSTRACT: The new slabing mill 1150 has been put into operation at the East Slovak Metallurgical Plant. The slabing mill rolls 10—24 ton ingots into slabs which then are hot rolled into wide strips. The reversible slabing mill has rolls 1150 mm in diameter and 2100 mm long. The rolling speed is up to 4.0 m/sec. The mill was built by the Voltovice Metallurgical Plant. With this mill in operation the East Slovak Plant becomes a combine with a full metallurgical cycle. It has a five-stand tandem for cold rolling, a continuous mill for wide strip hot rolling, a blast furnace, a coking plant, and one basic oxygen converter in the steel plant. Orig. art. has: 3 figures and 1 table.

SUB CODE: 1 / SUBM DATE: none/ ATD PRESS: 5108

Card 1/1

APPROVED FOR RELEASE: 03/14/2001 CIA-RDP86-00513R001551010019-8"

"APPROVED FOR RELEASE: 03/14/2001 CIA-RDP86-00513R001551010019-8

SKLENAR, Karel

Corrosion and petroleum processing in hydrogenation plants.
Ropa a uhlie 5 no.6:180 Je '63.

1. Chemicke zavody Ceskoslovensko-sovetskeho pratelstvi, Zaluzi.

APPROVED FOR RELEASE: 03/14/2001 CIA-RDP86-00513R001551010019-8"

"APPROVED FOR RELEASE: 03/14/2001 CIA-RDP86-00513R001551010019-8

SKLENAR, M.

Protection of machinery from ruination by damage to axle bearings. p.434

ENERGETIKA. (Ministerstvo energetiky a Ceskoslovenska vedecka technicka spolecnost pro energetiku pri Ceskoslovenske akademii ved) Praha, Czechoslovakia
Vol.4, no.10, Oct. 1955

Monthly List of East European Accessions (EEAI) LC, Vol.8, no.11, Nov. 1959, Uncl.

APPROVED FOR RELEASE: 03/14/2001 CIA-RDP86-00513R001551010019-8"

"APPROVED FOR RELEASE: 03/14/2001 CIA-RDP86-00513R001551010019-8

SKLENAR, F.

Selection of a high-voltage switchgear for installations up to 6 kv. p. T40

Vol. 44, no. 10, Oct. 1955
ELEKTROTECHNICKY CASOPIS
Praha, Czechoslovakia

Source: East European Accession List. Library of Congress
Vol. 5, No. 3, August 1956

APPROVED FOR RELEASE: 03/14/2001 CIA-RDP86-00513R001551010019-8"

"APPROVED FOR RELEASE: 03/14/2001 CIA-RDP86-00513R001551010019-8

S 262/62/000/006/010/021
1007/1207

Author Sklenář, Milan

Title TWO-STROKE (CYCLE) INTERNAL COMBUSTION ENGINE

Periodical *Referativnyy zhurnal, otdel'nyy vypusk 42 Silovye ustanovki*, no 6, 1962, 61, abstract 42 6.270 (Chekhosl pat., kl 46a^{10}, 1/02, no 97135, 15.11 60)

Text The following kinematic scheme has been suggested to improve admission of the combustible mixture into the working cavity [Abstractor's note of the cylinder] for lowering the center of gravity of the engine and reduction of its height. The crankshaft (21) is located between the two V-shaped cylinders (9) and (19) (see figure) The rods of the pistons (6) and (16) and of the crankshafts (2) and (12) are connected to the arms (4) and (14) by common pins (3) and (13) The connecting rod (2) unites the points 3-5, while the rod (3) unites the points 13-15 Both connecting rods together transmit the reciprocating motion of the piston to the crankshaft The cylinders have a common compression (combustion) chamber (22) The admission ports (10) are located in the righthand cylinders, while the exhaust ports (20) are in the lefthand cylinder As a result of such an arrangement, the pistons reach the upper center at the same time, depending on the sense of rotation Thus, for instance, in clockwise rotation of the engine, when the lefthand piston is at the lower dead center and

Card 1/2

APPROVED FOR RELEASE: 03/14/2001 CIA-RDP86-00513R001551010019-8"

"APPROVED FOR RELEASE: 03/14/2001 CIA-RDP86-00513R001551010019-8

TWO-STROKE (CYCLE) INTERNAL

S 262 62/000 006 010/021
I007/I207

the pin (13) is in position 13-a, the pin (3) of the righthand piston is still in position 3-a. The engine may be designed either as a Diesel or as a carburettor engine. 1 figure

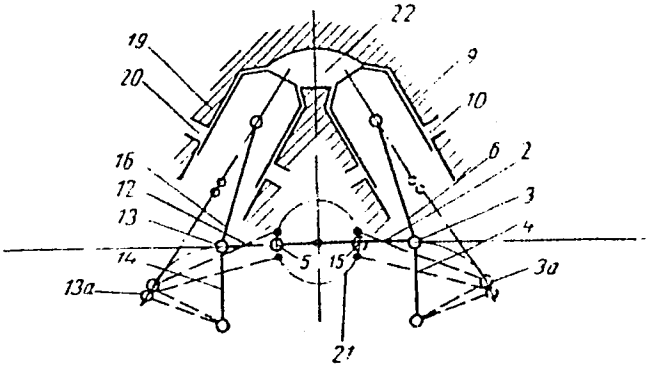

[Abstractor's note: Complete translation.]

Card 2/2

APPROVED FOR RELEASE: 03/14/2001 CIA-RDP86-00513R001551010019-8"

"APPROVED FOR RELEASE: 03/14/2001 CIA-RDP86-00513R001551010019-8

18.8510 25289 Z/021/61/000/008/001/002
D007/D102

AUTHORS: Sklenář, R., Engineer, and Mikl, A.

TITLE: Selecting the alignment of steel pipelines in view of corrosion by stray currents

PERIODICAL: Paliva, no. 8, 1961, 246-253

TEXT: Stray currents from d-c electrified RRs cause a severe corrosion of underground steel pipelines. The various active, passive, and combined electrical protection systems are either not fully effective or they are too expensive so that their application is limited. A better and cheaper way of preventing pipeline corrosion by stray currents is suitable pipeline alignment, i.e., to have the pipeline run across areas with the least stray-current intensity. According to the danger of stray-current corrosion, a pipeline can be divided into the following three zones: (1) The α-zone of simple soil corrosion which can be mitigated by quality coating combined with cathodic protection, and/or sacrificial anodes. (2) The β-zone

Card 1/ 3

APPROVED FOR RELEASE: 03/14/2001 CIA-RDP86-00513R001551010019-8"

"APPROVED FOR RELEASE: 03/14/2001 CIA-RDP86-00513R001551010019-8

25289 Z/021/61/000/008/001/002
Selecting the alignment of steel,.. D007/D102

with weak stray-current corrosion which can be mitigated by a more intensive cathodic protection, and/or by "electrical drains". This zone is separated from the δ -zone by insulation joints. (3) The δ-zone in which the pipeline is directly exposed to corrosion by stronger or strong stray currents so that the pipeline has to be protected by a combination of increased cathodic protection, quality coating and "electrical drains". Several examples of suitable pipeline alignments near stray-current sources are given and economically evaluated. Generally, the following recommendations are made for pipeline construction: (1) Areas with stray currents should be avoided entirely or as much as possible. (2) Where a crossing of electrified tracks is inevitable, the pipeline should run perpendicularly to the electrified tracks and centered between substations (area of minimum stray-current intensity); it should continue in this direction away from the stray-current source till the β - or α -zone is reached. (3) Where the pipeline has to run parallel to electrified tracks, the distance should be at least 200 - 500 m, with the maximum distance in the vicinity of a substation. (4) Whenever possible,

Card 2/3

APPROVED FOR RELEASE: 03/14/2001 CIA-RDP86-00513R001551010019-8"

"APPROVED FOR RELEASE: 03/14/2001 CIA-RDP86-00513R001551010019-8

25289 Z/021/61/000/008/001/002
Selecting the alignment of steel... D007/D102

pipelines should be buried in the soil with maximum specific resistance. (5) Areas with a large number of closely spaced underground installations, or with individual underground installations which may establish a connection between the pipeline and the stray-current source, should be avoided. On the other hand, it may be of advantage to build pipeline branches towards the source of stray current from the anodic areas of existing pipelines, as such branch lines can advantageously be used as "electrical drains". However, all these recommendations are not generally valid. Therefore, detailed corrosion and resistance testing, geological survey and economical analysis of pipeline sections, traversing areas contaminated by stray currents, should be made before the final alignment of a pipeline is selected. There are 11 figures and 7 Soviet-bloc references.

ASSOCIATION: Plynoprojekt, Praha (Plynoprojekt, Prague).

Card 3/3

APPROVED FOR RELEASE: 03/14/2001 CIA-RDP86-00513R001551010019-8"

"APPROVED FOR RELEASE: 03/14/2001 CIA-RDP86-00513R001551010019-8

SKLENAR, V.

Criticial notes on the 2d Exhibition of the Czechoslovak Machinery Industry in Brno. p.65.
(Technicka Praca, Vol. 9, No. 1, Jan. 1957, Bratislava, Czechoslovakia)

SO: Monthly List of East European Accessions (EEAL) LC. Vol. 6, No. 9, Sept. 1957. Uncl.

APPROVED FOR RELEASE: 03/14/2001 CIA-RDP86-00513R001551010019-8"

"APPROVED FOR RELEASE: 03/14/2001 CIA-RDP86-00513R001551010019-8

SKIEN[illegible], V.

The 3d Exhibition of Czechoslovak Engineering in Brno.

P. 63. (TECHNICKA PRACA) (Bratislava, Czechoslovakia) Vol. 10, No. 1, Jan. 1958

SO: Monthly Index of East European Accession (EEAI) LC Vol. 7, No. 5, 1958

APPROVED FOR RELEASE: 03/14/2001 CIA-RDP86-00513R001551010019-8"

"APPROVED FOR RELEASE: 03/14/2001 CIA-RDP86-00513R001551010019-8

SKLENAR, V.

CZECHOSLOVAKIA

SKLENAR, V; PLACHETA, J.

Okres Institute of National Health (Okresni ustav narodniho zdravi), Brno-venkov - (for all)

Prague, Rozhledy v tuberkulose, No 2, 1963, pp 127-135

"Review of the First Year's Experiences at the Tuberculosis Insitute in Babice."

APPROVED FOR RELEASE: 03/14/2001 CIA-RDP86-00513R001551010019-8"

"APPROVED FOR RELEASE: 03/14/2001 CIA-RDP86-00513R001551010019-8

SKLENARIK, Richard

Stamping of thin parts into lead. Jemna mech opt 7 no.3:89 Mr '62.

1. Meopta, n.p., Prerov, zavod Brno.

APPROVED FOR RELEASE: 03/14/2001 CIA-RDP86-00513R001551010019-8"

"APPROVED FOR RELEASE: 03/14/2001 CIA-RDP86-00513R001551010019-8

SKLENICKA, J.

APPROVED FOR RELEASE: 03/14/2001 CIA-RDP86-00513R001551010019-8"

"APPROVED FOR RELEASE: 03/14/2001 CIA-RDP86-00513R001551010019-8

[illegible]

[illegible]

[illegible]

[illegible]

[illegible]

[illegible]

[illegible]

APPROVED FOR RELEASE: 03/14/2001 CIA-RDP86-00513R001551010019-8"

"APPROVED FOR RELEASE: 03/14/2001 CIA-RDP86-00513R001551010019-8

KACALOVA, O.; KUMSARE, A.; KUNDZINS, M.; SKLENNIKS, C., red.; CERNOBROVA, L., tekhn. red.

[Large lakes in the vicinity of Riga]Lielie ezeri Rigas apkartne. Riga, Latvijas PSR Zinatnu Akademijas Izdevnieciba, 1962. 66 p. (MIRA 16:2)

(Riga region--Lakes)

APPROVED FOR RELEASE: 03/14/2001 CIA-RDP86-00513R001551010019-8"

"APPROVED FOR RELEASE: 03/14/2001 CIA-RDP86-00513R001551010019-8

SEDMALIS, U.; BERZINS, R.; SKLENNIKS, C., red.; PILADZE, Z., tekhn. red.

[Structure and use of glass] Stikla uzbuve un pielietosana. Riga, Latvijas PSR Zinatnu Akad. izdevnieciba, 1962. 31 p. (MIRA 16:5)

(Glass)

APPROVED FOR RELEASE: 03/14/2001 CIA-RDP86-00513R001551010019-8"

"APPROVED FOR RELEASE: 03/14/2001 CIA-RDP86-00513R001551010019-8

LAGZDINS, Edgars; SKLENNIKS, C., red.; BOHMANIS, R., tekhn. red.

[Silicones are the best water-repellents for building materials] Silikoni - labakie buvmaterialu hidrofobizatori. Riga, Latvijas PSR Zinatnu Akad. izdevnieciba, 1961. 31 p. (MIRA 15:5)
(Building materials) (Water proofing) (Silicones)

APPROVED FOR RELEASE: 03/14/2001 CIA-RDP86-00513R001551010019-8"

"APPROVED FOR RELEASE: 03/14/2001 CIA-RDP86-00513R001551010019-8

ABOLINS, Janis; IEVINS, Imants; SKLENNIKS, C., red.; PILADZE, Z., tekhn. red.

[Processing of slash at lumbering camps] Siko cirsanas atlieku sastradasana mezrupniecibas saimniecibas. Riga, Latvijas PSR Zinatnu akademijas izdevnieciba, 1961. 45 p. (MIRA 15:3)
(Latvia--Slash (Logging))

APPROVED FOR RELEASE: 03/14/2001 CIA-RDP86-00513R001551010019-8"

"APPROVED FOR RELEASE: 03/14/2001 CIA-RDP86-00513R001551010019-8

SLOKA, Janis; SKLEMNIKS, C., red.; OZOLINA, A., tekhn. red.

[Amphibia and reptiles of the Latvian S.S.R., their significance and harmfulness] Latvijas PSR abinieki un rapuli, to nozime un kaitigums. Riga, Latvijas PSR Zinatnu akad. izdevnieciba, 1961. 63 p. (MIRA 15:3)
(Latvia--Reptiles) (Latvia--Amphibia)

APPROVED FOR RELEASE: 03/14/2001 CIA-RDP86-00513R001551010019-8"

"APPROVED FOR RELEASE: 03/14/2001 CIA-RDP86-00513R001551010019-8

JURANE, Anna; MATISONE, Marija; SKLIENNIKS, C., red.; BOKMANIS, R., tekhn. red.

[Increasing the productivity of fishponds on collective and state farms in the Latvian S.S.R.] Diku produktivitates palielinasana Latvijas PSR lauksaimniecibas artelos un padomju saimniecibas. Riga, Latvijas PSR Zinatnu akad. izdevnieciba, 1961. 83 p. (MIRA 15:3)

(Latvia—Fishponds)

APPROVED FOR RELEASE: 03/14/2001 CIA-RDP86-00513R001551010019-8"

"APPROVED FOR RELEASE: 03/14/2001 CIA-RDP86-00513R001551010019-8

GUTMANIS, Krists; PETERSONS, E., kand. sel'khoz. nauk, retsenzent; BRENCSONS, A., retsenzent; SKLENNIKS, C., red.; PILADZE, Z., tekhn. red.

[Biochemical composition of fruits of the Latvian S.S.R.] Latvijas PSR auglu biokimiskais sastavs. Riga, Latvijas PSR Zinatnu akademijas izdevnieciba, 1961. 96 p. (MIRA 15:3)
(Latvia--Fruit)

APPROVED FOR RELEASE: 03/14/2001 CIA-RDP86-00513R001551010019-8"

"APPROVED FOR RELEASE: 03/14/2001 CIA-RDP86-00513R001551010019-8

KACALOVA, Olga; LAGANOVSKA, Ruta; SKLENNIKS, C., red.; BITARS, A., tekhn. red.

[Food supply for fish in the lakes of the Latvian S.S.R.] Zivju baribas baze Latvijas PSR ezeros. Riga, Latvijas PSR Zinatnu akademijas izdevnieciba, 1961. 103 p. (MIRA 15:3)
(Latvia--Fishes--Food)

APPROVED FOR RELEASE: 03/14/2001 CIA-RDP86-00513R001551010019-8"

"APPROVED FOR RELEASE: 03/14/2001 CIA-RDP86-00513R001551010019-8

ZVIEDRIS, Arvids; SACENIEKS, Rudolfs; MATUZANIS, Janis; SKLENNIKS, C., red.; PILADZE, Z., tekhn.red.

[Improvement cuttings in forests of the Latvian S.S.R.] Kopsanas cirtes Latvijas PSR mezos. Riga, Latvijas PSR Zinatnu akad.izdevnieciba, 1961. 152 p.

(MIRA 15:2)

(Latvia--Forest management)

APPROVED FOR RELEASE: 03/14/2001 CIA-RDP86-00513R001551010019-8"

"APPROVED FOR RELEASE: 03/14/2001 CIA-RDP86-00513R001551010019-8

BAMBERGS, K., akademik, red.; OZOLS, A., akademik, red.; EIHE, E., red.; CINOVSKIKH, J., doktor biol. nauk, red.; VANAGS, J., red.; SKLENNINS, C., red.; LEMBERGA, A., tekhn. red.

[Increasing the yield of row and pulse crops] Rusinamaugu un paksaugu razibas kapinasana. Riga, Latvijas PSR Zinatnu akad. izdevnieciba. Vol.6. 1963. 239 p. (MIRA 16:5)

1. Latvijas Padomju Socialistiskas Republikas Zinatnu akademija. Biologijas un medicinas zinatnu nodala. 2. Latvijas Padomju Socialistiskas Republikas Zinatnu akademija (for Bambergs, Ozols). 3. Latvijas Padomju Socialistiskas Republikas Zinatnu akademijas korespondetajloceklis (for Eihe). 4. Vissavienibas Lenina lauksaimniecibas akademijas korespondetajloceklis (for Vanags).
(Latvia--Field crops)

APPROVED FOR RELEASE: 03/14/2001 CIA-RDP86-00513R001551010019-8"

"APPROVED FOR RELEASE: 03/14/2001 CIA-RDP86-00513R001551010019-8

HRBEK, Jar.; HRBEK, Jan; HAVLICEK, V.; HREBICEK, J.; SKLENOVSKY, A.

Epidural recording of electrical activity of the brain in a cat preparation in wakeful state. Activ. nerv. sup. 4 no.2:135-136 '62.

1. Laborator VNC lekarske fakulty Palackeho university v Olomouci, katedra patologicke fyziologie lekarske fakulty Palackeho university v Olomouci.

(BRAIN physiol)

APPROVED FOR RELEASE: 03/14/2001 CIA-RDP86-00513R001551010019-8"

"APPROVED FOR RELEASE: 03/14/2001 CIA-RDP86-00513R001551010019-8

HRBEK, Jar.; HRBEK, Jan; HAVLICEK, V.; HREBICEK, J.; SKLENOVSKY, A.

Localization of cortical areas of analyzers in the cat. Activ. nerv. sup. 4 no.2:136-137 '62.

1. Laborator VNC lekarske fakulty Palackeho university v Olomouci, katedra patologicke fyziologie lekarske fakulty Palackeho university v Olomouci.

(CEREBRAL CORTEX physiol)

APPROVED FOR RELEASE: 03/14/2001 CIA-RDP86-00513R001551010019-8"

"APPROVED FOR RELEASE: 03/14/2001 CIA-RDP86-00513R001551010019-8

HRBEK, Jar.; HRBEK, Jan.; HAVLICEK, V.; HREBICEK, J.; SKLENOVSKY, A.

The cortical area of proprioceptive analyzers, its somatotropic sectors and projection areola. Activ. nerv. sup. 4 no.2:137-138 '62.

1. Laborator VNC lekarske fakulty Palackeho university v Olomouci, katedra patologicke fyziologie lekarske fakulty Palackeho university v Olomouci.

(CEREBRAL CORTEX physiol)

APPROVED FOR RELEASE: 03/14/2001 CIA-RDP86-00513R001551010019-8"

"APPROVED FOR RELEASE: 03/14/2001 CIA-RDP86-00513R001551010019-8

HRBEK, Jar.; HRBEK, Jan.; HAVLICEK, V.; HREBICEK, J.; SKLENOVSKY, A.

The proprioceptive motor and interoceptive interomtor control circuit. Activ. nerv. sup. 4 no.2:138-139 '62.

1. Laborator VNC lekarske fakulty Palackeho university v Olomouci, katedra patologicke fyziologie lekarske fakulty Palackeho university v Olomouci.

(CEREBRAL CORTEX physiol) (REFLEX CONDITIONED)
(MOVEMENT physiol)

APPROVED FOR RELEASE: 03/14/2001 CIA-RDP86-00513R001551010019-8"

"APPROVED FOR RELEASE: 03/14/2001 CIA-RDP86-00513R001551010019-8

HRBEK, Jar.; HRBEK, Jan ; HAVLICEK, V.; HREBICEK, J.; SKLENOVSKY, A.

The problem of local and distal recording of evoked potentials. Activ. nerv. sup. 4 no.2:139-140 '62.

1. Laborator VNC lekarske fakulty Palackeho university v Olomouci, katedra patologicke fyziologie lekarske fakulty Palackeho university v Olomouci.

(CEREBRAL CORTEX physiol)

APPROVED FOR RELEASE: 03/14/2001 CIA-RDP86-00513R001551010019-8"

"APPROVED FOR RELEASE: 03/14/2001 CIA-RDP86-00513R001551010019-8

HRBEK, Jan; DOCKAL, C.; HREBICEK, J.; SKLENOVSKY, A.; DOSTALOVA, K.; VIZINOVA, H.; POLASEK, J.

Concomitant autonomic reactions during the process of training in laboratory language. I. Studies on thermal changes. Activ. nerv. sup. 4 no.2:152-154 '62.

(BODY TEMPERATURE physiol) (LEARNING) (LANGUAGE)

APPROVED FOR RELEASE: 03/14/2001 CIA-RDP86-00513R001551010019-8"

"APPROVED FOR RELEASE: 03/14/2001 CIA-RDP86-00513R001551010019-8

HRBEK, J.; SKLENOVSKY, A.; HREBICEK, J.

Contribution to the problem of the cortical localization of the proprioceptive analyzer. Cas. lek. cesk. 101 no.36:1090-1096 7 S '62.

1. Ustav patologicke fyziologie lekarske fakulty PU v Olomouci, prednosta prof. dr. J. Hrbek.
(CEREBRAL CORTEX) (RECEPTORS NEURAL) (OCULOMOTOR MUSCLES)

APPROVED FOR RELEASE: 03/14/2001 CIA-RDP86-00513R001551010019-8"

"APPROVED FOR RELEASE: 03/14/2001 CIA-RDP86-00513R001551010019-8

APPROVED FOR RELEASE: 03/14/2001 CIA-RDP86-00513R001551010019-8"

"APPROVED FOR RELEASE: 03/14/2001 CIA-RDP86-00513R001551010019-8

SKLENOVSKY, A.; HRBEK, Jan

The relationship between gamma-aminobutyric acid and the inhibitory process. The effect of gamma-aminobutyric acid on the release of ammonia in various structures of brain slices in the cat. Acta nerv. sup. (Praha) 6 no.4: 361-365 '64.

1. Ustav patologicke fyziologie lekarske fakulty Palackeho University, Olomouc.

APPROVED FOR RELEASE: 03/14/2001 CIA-RDP86-00513R001551010019-8"

"APPROVED FOR RELEASE: 03/14/2001 CIA-RDP86-00513R001551010019-8

SKLENOVSKY, A. (Olomouc,, Hnevotinska 3)

The effect of ethylendiaminetetraacetic acid (EDTA), ouabain, ascorbic acid, dinitrophenol on the metabolism of free amino acids in the rat brain in vitro. Activ. nerv. sup. (Praha) 7 no.2:151-152 '65

1. Department of Pathophysiology Medical Faculty , Palackeho University, Olomouc.

APPROVED FOR RELEASE: 03/14/2001 CIA-RDP86-00513R001551010019-8"

"APPROVED FOR RELEASE: 03/14/2001 CIA-RDP86-00513R001551010019-8

L 12907-66

ACC NR: AP6005644 SOURCE CODE: CZ/0079/65/007/002/0151/0152

AUTHOR: Sklenovsky, A.

ORG: Department of Pathophysiology, Medical Faculty, Palacky University, Olomouc

TITLE: Effect of ethylenediaminetetraacetic acid (EDTA), ouabain, ascorbic acid, and dinitrophenol on the metabolism of free amino acids in the rat brain in vitro [This paper was presented at the Third Interdisciplinary Conference on Experimental and Clinical Study of Higher Nervous Functions held in Marianske Lazne from 19 to 23 October 1964.]

SOURCE: Activitas nervosa superior, v. 7, no. 2, 1965, 151-152

TOPIC TAGS: biologic metabolism, rat, brain, drug effect, ascorbic acid, amino acid, neuron, glutamic acid

ABSTRACT: Production of glutamic acid, glutamine, gammaaminobutyric acid (GABA), and the liberation of aminoacids into an incubation medium were studied. Under the influence of EDTA glutamic acid concentration in the medium increased, glutamine decreased, and GABA remained unchanged; ammonia production increased. Varying concentrations of EDTA (between 0.01 and 0.001M) had a varying influence. Ouabain increased the liberation of glutamic acid and GABA. Ascorbic acid increased the liberation of glutamic acid and consumption of oxygen. Dinitrophenol increased the liberation of glutamic acid, decreased that of GABA and glutamine. Changes in the function of neurons and of some synapses under the influence of neurotropic drugs

Card 1/2

APPROVED FOR RELEASE: 03/14/2001 CIA-RDP86-00513R001551010019-8"

"APPROVED FOR RELEASE: 03/14/2001 CIA-RDP86-00513R001551010019-8

L 12907-66

ACC NR: AP6005644

may be explained by the change in amino acid distribution. [JPRS]

SUB CODE: 06 / SUBM DATE: none / OTH REF: 006

Card 2/2

APPROVED FOR RELEASE: 03/14/2001 CIA-RDP86-00513R001551010019-8"

"APPROVED FOR RELEASE: 03/14/2001 CIA-RDP86-00513R001551010019-8

[illegible]

[illegible] nerve endings in joint capsules of dogs, [illegible] and adult rabbits. Fetal morph. [illegible] 1[illegible] no. [illegible]:3[illegible]-383 [illegible].

1. [illegible] Institute, Medical Faculty, I.E. Purkyne's University, [illegible], Czechoslovakia. Submitted February [illegible], 1[illegible].

APPROVED FOR RELEASE: 03/14/2001 CIA-RDP86-00513R001551010019-8"

"APPROVED FOR RELEASE: 03/14/2001 CIA-RDP86-00513R001551010019-8

POLACEK, Premysl; SKLENSKA, Anna

Specific differences in the arrangement of joint receptors in various rodents. Sborn. ved. prac. lek. fak. Karlov. Univ. 7 no.4:617-623 '64.

1. Katedra anatomie Lekarske fakulty University J. E. Purkyne, Brno (prednosta: doc. MUDr. P. Polacek, DrSc.).

APPROVED FOR RELEASE: 03/14/2001 CIA-RDP86-00513R001551010019-8"

"APPROVED FOR RELEASE: 03/14/2001 CIA-RDP86-00513R001551010019-8

L 18970-63 EPR/EPF(c)/EWT(m)/BDS AFFTC/ASD/ESD-3 Ps-4/Pr-4 RM/WW/MAY

ACCESSION NR: AP3006627 S/0076/63/037/009/2094/2099

71
69

AUTHORS: Knyazev, D. A.; Sklenskaya, E. V.

TITLE: The separating ability of complexes with respect to lithium isotopes 19

SOURCE: Zh. fizicheskoy khimii, v. 37, no. 9, 1963, 2094-2099

TOPIC TAGS: isotopic exchange equilibrium, lithium complex, ion exchange, nitrilotriacetic chelate, EDTA, lithium

ABSTRACT: Authors present an experimental study on the separating ability of complexes in relation to lithium isotopes. The reactions of isotopic ion exchange between the chelated lithium complexes and aqueous lithium complexes with nitrilotriacetic, EDTA and aminobarbituric-N-N-diacetic have been investigated in aqueous solutions. Their corresponding separation factors were found. The chelate complexes become enriched in ^{6}Li isotope. The direction of enrichment and the sequence of increasing values of the separating factors have been qualitatively explained by the difference in bond strengths of the lithium ion with the functional groups of the chelating agents. The Orig. art. has: 2 tables, 3 figures, and 10 formulas.

ASSN: MOSCOW CHEMICAL ENGINEERING INSTITUTE, PHYSICO-CHEMICAL INSTITUTE

Card 1/1

APPROVED FOR RELEASE: 03/14/2001 CIA-RDP86-00513R001551010019-8"

"APPROVED FOR RELEASE: 03/14/2001 CIA-RDP86-00513R001551010019-8

SKLENSKAYA, E.V.; KARAPET'YANTS, M. Kh.

Use of the methods of comparative evaluation for determining the values of the instability constants of the halides of Al, Ga, In, Tl. Zhur. neorg. khim. 9 no.11:2564-2568 N '64 (MIRA 18:1)

APPROVED FOR RELEASE: 03/14/2001 CIA-RDP86-00513R001551010019-8"

"APPROVED FOR RELEASE: 03/14/2001 CIA-RDP86-00513R001551010019-8

KARAPET'YANTS, M.Kh.; SKLENSKAYA, E.V.

Methods of comparative evaluation for determining the properties of complex compounds. Zhur. fiz. khim. 38 no.5:1312-1316 My '64. (MIRA 18:12)

1. Khimiko-tekhnologicheskiy institut imeni Mendeleyeva. Submitted June 18, 1963.

APPROVED FOR RELEASE: 03/14/2001 CIA-RDP86-00513R001551010019-8"

"APPROVED FOR RELEASE: 03/14/2001 CIA-RDP86-00513R001551010019-8

SKLENSKY, Bohuslav; VYSKOCIL, Jiri

Severe poisoning with benzol after a short exposure. Pracovni lek. 9 no.4:324-327 Sept 57.

1. Klinika chorob z povolani FN v Brne, prednosta doc. Dr Karel Kadlec. B. S., Brno, Kotlarska 35 a.

(BENZENE, pois.
occup. after short exposure (Cz))
(OCCUPATIONAL DISEASES,
benzene pois. after short exposure (Cz))

APPROVED FOR RELEASE: 03/14/2001 CIA-RDP86-00513R001551010019-8"

"APPROVED FOR RELEASE: 03/14/2001 CIA-RDP86-00513R001551010019-8

VYSKOCIL, Jiri; SKLENSKY, Bohuslav; KAREN, Alexander

Diseases of the respiratory tract in streetcar workers. Pracovni lek. 10 no.1:32-36 Mar 58.

1. Klinika chorob z povolani v Brne, prednosta doc. MUDr K. Kadlec Klinika chorob usnich, nosnich a krcnich v Brne, prednosta profesor MUDr Frant. Ninger. J. V. Klinika chorob z povolani Brno, Pekarska ul. 53.

(RESPIRATORY TRACT, diseases,
in streetcar workers (Cz))

APPROVED FOR RELEASE: 03/14/2001 CIA-RDP86-00513R001551010019-8"

"APPROVED FOR RELEASE: 03/14/2001 CIA-RDP86-00513R001551010019-8

MIERSKY, B.; BOLESLAV, A.; DOSTALOVA, H.

Observation on a case of transformation of leukopenia into leukemia in an x-ray technician. Pracovni lek. 10 no.1:57-61 Mar 58.

1. Klinika chorob z povolani v Brne, prednosta doc. Dr. K. Kadlec. Ustav pathologicke anatomie LF v Brne, prednosta profesor Dr. J. Svejda. Predneseno na V. celostatnim sjezdu pracovniho lekarstvi v Gottwaldove. B. S., Brno, Kotlarska 35a.

(OCCUPATIONAL DISEASES,
leukemia develop. from leukopenia in x-ray technician (Cz))
(ROENTGEN RAYS, inj. eff.
leukemia develop. from leukopenia in x-ray technician (Cz))
(LEUKEMIA, case reports,
develop. from leukopenia in x-ray technician (Cz))
(LEUKOCYTES,
leukopenia develop. into leukemia in x-ray technician (Cz))

APPROVED FOR RELEASE: 03/14/2001 CIA-RDP86-00513R001551010019-8"

"APPROVED FOR RELEASE: 03/14/2001 CIA-RDP86-00513R001551010019-8

KAREN, Alexandr; VYSKOCIL, Jiri; SKLENSKY, Bohuslav

Relationship between diseases of the upper and of the lower parts of the respiratory tract in city transport workers. Cesk. otolar 8 no.2: 78-84 Apr 59.

1. Klinika chorob usnich, nosnich a krcnich lek. fak. v Brne, prednosta prof. dr. Fr. Ninger Klinika chorob z povlani lek. fak. v Brne, prednosta doc. dr. K. Kadlec.
(RESPIRATORY TRACT, dis.
in city transport workers (Cz))

APPROVED FOR RELEASE: 03/14/2001 CIA-RDP86-00513R001551010019-8"

"APPROVED FOR RELEASE: 03/14/2001 CIA-RDP86-00513R001551010019-8

SKLENSKY, Bohuslav

Clinical aspects of chronic bronchitis and emphysema in pneumoconiosis in miners. Pracovni lek. 11 no.8:407-412 Oct 59.

1. Klinika chorob z povolani v Brne, prednosta doc. Dr. K. Kadlec.
(BRONCHITIS, etiol.) (PULMONARY EMPHYSEMA, etiol.)
(PNEUMOCONIOSIS, compl.)

APPROVED FOR RELEASE: 03/14/2001 CIA-RDP86-00513R001551010019-8"

"APPROVED FOR RELEASE: 03/14/2001 CIA-RDP86-00513R001551010019-8

SKLENSKY, B.; KAREN, A.

The relation of chronic inflammation of the paranasal sinuses to chronic inflammation of the lower respiratory tract in miners. Pracovni lek. 13 no.4:187-190 My '61.

1. Klinika chorob z povolani v Brne, prednosta doc. MUDr. K. Kadlec. Klinika chorob usnich, nosnich a krenich v Brne, prednosta profesor MUDr. R. Hladky.

(SINUSITIS compl) (RESPIRATORY TRACT INFECTIONS compl) (MINING)

APPROVED FOR RELEASE: 03/14/2001 CIA-RDP86-00513R001551010019-8"

"APPROVED FOR RELEASE: 03/14/2001 CIA-RDP86-00513R001551010019-8

SELLNSKY, B.

[illegible]

B. SELLNSKY. (Affiliation not stated.)

"[illegible] from the Clinical Seminar on Occupational Diseases, Held in [illegible] on 14 June 1962."

Sbornik, Lekarstvi, Vol 14, No 10, Dec 1962: [illegible] 479-480.

[illegible] seminar devoted to effects of x-ray and ionizing radiation [illegible] organism of participants. Three papers: by Dr [illegible] on occupational risk in x-ray establishments, by Dr V. [illegible] on hematologic [illegible] in workers exposed to ionizing radiation, and by Dr B. [illegible] on toxicologic evaluation of radioactive substances. The 3 [illegible] are briefly abstracted.

1/1

APPROVED FOR RELEASE: 03/14/2001 CIA-RDP86-00513R001551010019-8"

"APPROVED FOR RELEASE: 03/14/2001 CIA-RDP86-00513R001551010019-8

SKLENSKY, B.; BERKA, I.

Pneumoconiosis in graphite mines. Prac. lek 15 no.10:422-426 D '63.

1. Klinika nemoci z povolani lekarske fakulty UJEvP v Brne (prednosta doc. dr. J. Vyskocil) a Krajska hygienicko-epidemiologicka stanice v Brne, oddeleni hygieny prace (vedouci dr. K. Spazier).

APPROVED FOR RELEASE: 03/14/2001 CIA-RDP86-00513R001551010019-8"

"APPROVED FOR RELEASE: 03/14/2001 CIA-RDP86-00513R001551010019-8

VYSKOCIL, Jiri; TUMA, Jiri; SKLENSKY, Bohuslav

Experimental study on elimination of dust from the lung. I. Relation of bronchial and lung changes to elimination of silica dust in rats. Prac. lek. 16 no.3 97-101 Mr'64

1. Klinika nemoci z povolani lekarske fakulty UJEvP [University J.E.Purkyne] v Brne; prednosta: doc. dr. J. Vyskocil.

APPROVED FOR RELEASE: 03/14/2001 CIA-RDP86-00513R001551010019-8"

"APPROVED FOR RELEASE: 03/14/2001 CIA-RDP86-00513R001551010019-8

SKLENSKY, Bohuslav; DOLEZEL, Svatopluk

Acute silicosis in a cleaner of castings. Prac. lek. 16 no.3: 120-122 Mr'64

1. Klinika nemocí z povolání lekarske fakulty UJEvP [University J.E.Purkyne] v Brne (prednosta: doc. dr. J. Vyskocil, CSc.) a Ustav patologicke anatomie lekarske fakulty UJEvP [University J.E.Purkyne] v Brne (prednosta: prof. dr. J.Svejda).

APPROVED FOR RELEASE: 03/14/2001 CIA-RDP86-00513R001551010019-8"

"APPROVED FOR RELEASE: 03/14/2001 CIA-RDP86-00513R001551010019-8

LEJHANCOVA, Marketa; SKLENSKY, Bohuslav; KAREN, Alexandr

Skin injury in the production of tar paper. Prac. lek. 16 no.4: 163-166 My '64

1. Klinika nemoci z povolani lekarske fakulty University J.E. Purkyne v Brne (prednosta: doc. dr. J. Vyskocil).

APPROVED FOR RELEASE: 03/14/2001 CIA-RDP86-00513R001551010019-8"

"APPROVED FOR RELEASE: 03/14/2001 CIA-RDP86-00513R001551010019-8

SKLENAR, Johuminy

Galloping silicosis from a cast steel plant in the roentgen picture. Prac. lek. 16 no.8:356-359 O '64.

1. Klinika nemoci z povolani lekarske fakulty University J.E. Purkyne v Brne (prednosta doc. dr. J. Vyskocil).

APPROVED FOR RELEASE: 03/14/2001 CIA-RDP86-00513R001551010019-8"

"APPROVED FOR RELEASE: 03/14/2001 CIA-RDP86-00513R001551010019-8

L 2055-66

ACCESSION NR: AP5027373 CZ/0053/65/000/001/0062/0063

AUTHOR: Sklensky, B. 18

TITLE: Suitable dosimeter for fine dust for inhalation dusting of lungs of experimental animals B

14

SOURCE: Ceskoslovenska fysiologie, no. 1, 1965, 61-63

TOPIC TAGS: experiment animal, medical equipment, industrial hygiene, respiratory system

ABSTRACT: Review of the known methods for introduction of the dust is presented. Apparatus designed by the author is described. Method of operating the apparatus is presented. Time factor of the experiments is stressed. Tests of the apparatus conducted on rats are described. Orig. art. has 1 figure.

ASSOCIATION: Klinika nemoci z povolani lek. fak. UJEP, Brno (Clinic of Occupational Diseases, Medical Faculty, UJEP)

SUBMITTED: 00 ENCL: 00 SUB CODE: LS

NO REF SOV: 000 OTHER: 000 JPRS

Card 1/1

APPROVED FOR RELEASE: 03/14/2001 CIA-RDP86-00513R001551010019-8"

"APPROVED FOR RELEASE: 03/14/2001 CIA-RDP86-00513R001551010019-8

CZECHOSLOVAKIA UDC 616.24-003.65(:546.284):616.428-076

SKLENSKY, Bohuslav; FILKUKA, Jaroslav; ZAVREL, Ivo; Clinic of Occupational Diseases (Klinika Nemoci z Povolani) Head (Prednosta) Prof Dr J. VYSKOCIL; 1st Institute for Pathological Anatomy (I. Ustav Patologicko Anatomie) Head (Prednosta) Prof Dr J. SVEJDA; 1st Surgical Clinic (I. Chirurgicka Klinika) Head (Prednosta) Docent Dr J. UHLIR, Medical Faculty, J. Ev. Purkyne University (Lek. Fak. UJEvP) Brno.

"Biopsy of Scalene Nodules in Silicosis."

Prague, Pracovni Lekarstvi, Vol 18, No 6 - 7, Aug 66, pp 253-255

Abstract /Authors' English summary modified 7: Extirpation and histological examination of deep scalene nodules from the right neck side of 27 patients was carried out. Foundry workers, miners, tunnellers, and stone cutters showed symptoms of complicated silicosis most frequently. In 8 of the investigated workers marked silicotic nodules were found by histological examination; in 15 deposits of anthracotic pigment , and in all cases acute lymphadenits was found. Tuberculous changes were not found at all. 6 Figures, 10 Western, 2 Czech, 1 Russian, 1 East German, 1 Polish, 1 Hungarian reference. (Manuscript received 27 Oct 65).

1/1

bronchial asthma. B. SKLENSKY reviewed the determination of ventilation equivalents of oxygen and carbon dioxide by means of an interferometer on subjects working in a finishing shop for

APPROVED FOR RELEASE: 03/14/2001 CIA-RDP86-00513R001551010019-8"

"APPROVED FOR RELEASE: 03/14/2001 CIA-RDP86-00513R001551010019-8

SKLEPCHUK, V.M., inzhener; ARONOVICH, I.I., inzhener.

Hauling winch with remote control. Mekh.trud.rab. 8 no.8:14-16 D '54.
(Winches) (MLRA 8:1)

APPROVED FOR RELEASE: 03/14/2001 CIA-RDP86-00513R001551010019-8"

"APPROVED FOR RELEASE: 03/14/2001 CIA-RDP86-00513R001551010019-8

ALEKHIN, F.K.; ALOTIN, L.M.; ALTAYEV, Sh.A.; ANTONOV, P.Ye.; BEVZIK, Yu.Ya.; BELEN'KIY, D.M.; BRATCHENKO, B.F., gornyy inzh.; BRENNER, V.A.; BYR K[illegible] V.F.; VAL'SHTEYN, G.I.; YERMOLENOK, N.S.; ZHISLIN, I.M.; IVANOV, V.A.; IVANCHENKO, G.Ye.; KVON, S.S.; KODYK, G.T.; KREMENCHUTSKIY, N.F.; KURDYAYEV, B.S.; KUSHCHANOV, G.K.; MASTER, A.Z.; PREOBRAZHENSKAYA, Ye.I.; ROZENTAL', Yu.M.; RUDOY, I.L.; RUSHCHIN, A.A.; RYBAKOV, I.P.; SAGINOV, A.S.; SAMSONOV, M.T.; SERGAZIN, F.S.; SKLEPCHUK, V.M.; USTINOV, A.M.; UTTS, V.N.; FEDOTOV, I.P.; KHRAPKOV, G.Ye.; SHILENKOV, V.N.; SHNAYDMAN, M.I.; BOYKO, A.A., retsenzent; SUROVA, V.A., ved. red.

[Mining of coal deposits in Kazakhstan] Razrabotka ugol'nykh mestorozhdenii Kazakhstana. Moskva, Nedra, 1965. 292 p. (MIRA 18:5)

APPROVED FOR RELEASE: 03/14/2001 CIA-RDP86-00513R001551010019-8"

"APPROVED FOR RELEASE: 03/14/2001 CIA-RDP86-00513R001551010019-8

USSR / Meadow Cultivation L

Abs Jour: Ref Zhur-Biol., Vol 13, 1959, 58458

Author : Sklerius, P.

Inst : Lithuanian Agricultural Academy

Title : Improvement of Drained Meadows in Industrial Experiments and in Kolkhoz Production

Orig Pub: Tr. Lit. s.-kh. akad., 1957, 3, 211-230

Abstract: This contains generalized data collected from numerous industrial-demonstration experiments on both root and surface improvement of meadows in the Lithuanian SSR. These experiments took place in the period 1934-1939. The surface improvement of good meadows by using the fertilizer PK yields on the average an increment of 1.5 t/ha for the first

Card 1/2

12,

APPROVED FOR RELEASE: 03/14/2001 CIA-RDP86-00513R001551010019-8"